Work Order ID 63606

Thursday, November 04, 2010 1:01:01 PM

Item ID: D3245-041 **Accept** **Setup Start**

Revision ID:

Item Name: Access Panel Assembly **Stop**

Start Date: 11/4/2010 **Start Qty:** 4.00 **Cust Item ID:**

Required Date: 11/15/2010 **Req'd Qty:** 4.00 **Customer:**

Reference:

Approvals: **Process Plan:** _____ **Date:** 10-11-09 **Tooling:** _____ **Date:** _____ **Run Start**

QC: _____ **Date:** _____ **SPC (Y/N):** _____ **Date:** _____ **Stop**

Sequence ID/ Work Center ID	Operation Description	Set Up/ Run Hours	Tool ID	Tool #	Plan Code	Accept Qty	Reject Qty	Reject Number	Insp. Stamp
Draw Nbr	**Revision Nbr**								
D3245	Rev B								
100	Pick Kit	0.00							
Packaging	**Memo**	0.00							
Packaging									
110	Small Fab	0.00							
Small Fab	**Memo**	0.00							
Small Fab	Install Rivets and Nut Plates and D3245-5 angle as per Dwg D3245□be careful when countersinking...mat'l very thin								
120	QC5- Inspect part completeness to step on W/O	0.00							
QC	**Memo**	0.00							
Quality Control									

10/12/09 (4)

10/12/09 (4)

SB 10/12/09 (4)

Dart Aerospace Ltd

W/O:		WORK ORDER CHANGES					
DATE	STEP	PROCEDURE CHANGE	By	Date	Qty	Approval Chief Eng / Prod Mgr	Approval QC Inspector

Part No: _____ **PAR #:** _____ **Fault Category:** _____ **NCR:** Yes No **DQA:** _____ **Date:** _____

Resolution: _____ **Disposition:** _____ **QA: N/C Closed:** _____ **Date:** _____

NCR:		WORK ORDER NON-CONFORMANCE (NCR)						
DATE	STEP	Description of NC Section A	Corrective Action Section B			Verification Section C	Approval Chief Eng	Approval QC Inspector
			Initial Chief Eng	Action Description Chief Eng	Sign & Date			

NOTE: Date & initial all entries

H:\fFORMS\Quality Assurance\approved QA\NCRWO RevE

Work Order ID 63606

Thursday, November 04, 2010 1:01:01 PM

Item ID: D3245-041 **Accept** **Setup Start**

Revision ID: **Stop**

Item Name: Access Panel Assembly

Start Date: 11/4/2010 **Start Qty:** 4.00 **Cust Item ID:**

Required Date: 11/15/2010 **Req'd Qty:** 4.00 **Customer:**

Reference:

Approvals: **Process Plan:** _____ **Date:** _____ **Tooling:** _____ **Date:** _____ **Run Start**

QC: _____ **Date:** _____ **SPC (Y/N):** _____ **Date:** _____ **Stop**

Sequence ID/ Work Center ID	Operation Description	Set Up/ Run Hours	Tool ID	Tool #	Plan Code	Accept Qty	Reject Qty	Reject Number	Insp. Stamp
130	Identify as per dwg & Stock Location: 233B	0.00							
Packaging						10/12/13		SP (4)	
Packaging	**Memo**	0.00							
140	QC21- Final Inspection - Work Order Release	0.00							
QC								10/12/14	
Quality Control	**Memo**	0.00							

mf 10-12-13

Dart Aerospace Ltd

W/O:		WORK ORDER CHANGES					
DATE	STEP	PROCEDURE CHANGE	By	Date	Qty	Approval Chief Eng / Prod Mgr	Approval QC Inspector

Part No: _____ **PAR #:** _____ **Fault Category:** _____ **NCR:** Yes No **DQA:** _____ **Date:** _____

Resolution: _____ **Disposition:** _____ **QA: N/C Closed:** _____ **Date:** _____

NCR:		WORK ORDER NON-CONFORMANCE (NCR)						
DATE	STEP	Description of NC Section A	Corrective Action Section B			Verification Section C	Approval Chief Eng	Approval QC Inspector
			Initial Chief Eng	Action Description Chief Eng	Sign & Date			

NOTE: Date & initial all entries

H:\fFORMS\Quality Assurance\approved QA\NCRWO RevE

Picklist Print

Thursday, November 04, 2010 1:01:05 PM

2

Work Order ID: 63606

Parent Item: D3245-041

Parent Item Name: Access Panel Assembly

Start Date: 11/4/2010 **Required Date:** 11/15/2010

Start Qty: 4.00 **Required Qty:** 4.00

Comments: IPP Rev :A New Issue 07-09-11 JLM Verified By:EC
IPP Rev:b ECN 1052 07-10-31 DD verified by: EC

Component Item ID/ Item Name	Replacement Item ID	Mfg/ Purch	Bin Item	Primary Location	Last Location	Route Seq ID	Unit of Measure	Qty on Hand	Qty per Kit	Total Qty	Qty Issued	Date Issued	Status
2350-18-C3Y RIGID RECEPTACLE		Purchased	No			110	Each	132.0000	8	32	EB	10/12/09	
				Location		**Loc Qty**		**Loc Code**					
				ST399		132							
					111581	37				32			
					19688	95							
D3245-1 Panel		Manufactured	No			110	Each	3.0000	1	4	EB	10/12/09	
				Location		**Loc Qty**		**Loc Code**					
				ST233A		3							
					47609	3				4			
D3245-5 Door		Manufactured	No			110	Each	19.0000	1	4	EB	10/12/09	
				Location		**Loc Qty**		**Loc Code**			B34607 (1x)		
				ST233B		19							
					47591	7				3			
					47610	12							
MS20427M3-3 Rivet		Purchased	No			110	Each	1,816.000	16	64	EB	10/12/09	
				Location		**Loc Qty**		**Loc Code**					
				ST318		1816							
					115409	4							
					115589	1812				64			

Dart Aerospace Ltd

W/O:		WORK ORDER CHANGES					
DATE	STEP	PROCEDURE CHANGE	By	Date	Qty	Approval Chief Eng / Prod Mgr	Approval QC Inspector

Part No: _____ **PAR #:** _____ **Fault Category:** _____ **NCR:** Yes No **DQA:** _____ **Date:** _____

Resolution: _____ **Disposition:** _____ **QA: N/C Closed:** _____ **Date:** _____

NCR:		WORK ORDER NON-CONFORMANCE (NCR)						
DATE	STEP	Description of NC Section A	Corrective Action Section B			Verification Section C	Approval Chief Eng	Approval QC Inspector
			Initial Chief Eng	Action Description Chief Eng	Sign & Date			

NOTE: Date & initial all entries

H:\fFORMS\Quality Assurance\approved QA\NCRWO RevE

Picklist Print

Thursday, November 04, 2010 1:01:05 PM

Work Order ID: 63606

Parent Item: D3245-041

Parent Item Name: Access Panel Assembly

Start Date: 11/4/2010 **Required Date:** 11/15/2010

Start Qty: 4.00 **Required Qty:** 4.00

MS20615M3-3	Purchased	No	110	Each	51.0000	9	~~36~~	10/12/09
Rivet								

MS20615-3M3 usamea MS20615M3-3
CL 10/12/09

Location	Loc Qty	Loc Code
ST323	51	
111650	51	

M110985 36

Dart Aerospace Ltd

W/O:		WORK ORDER CHANGES					
DATE	STEP	PROCEDURE CHANGE	By	Date	Qty	Approval Chief Eng / Prod Mgr	Approval QC Inspector

Part No: _____ **PAR #:** _____ **Fault Category:** _____ **NCR:** Yes No **DQA:** _____ **Date:** _____

Resolution: _____ **Disposition:** _____ **QA: N/C Closed:** _____ **Date:** _____

NCR:		WORK ORDER NON-CONFORMANCE (NCR)						
DATE	STEP	Description of NC Section A	Corrective Action Section B			Verification Section C	Approval Chief Eng	Approval QC Inspector
			Initial Chief Eng	Action Description Chief Eng	Sign & Date			

NOTE: Date & initial all entries

H:\fFORMS\Quality Assurance\approved QA\NCRWO RevE

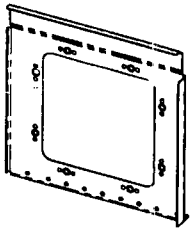

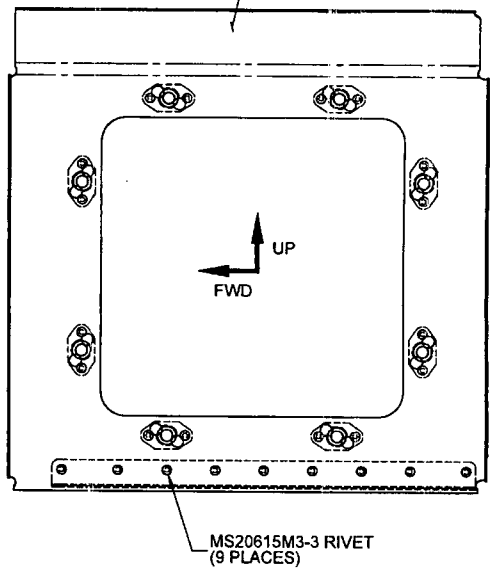

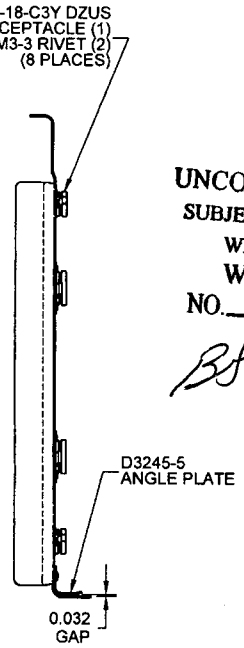

SHOP COPY
RETURN TO
ENGINEERING
UNCONTROLLED COPY
SUBJECT TO AMENDMENT
WITHOUT NOTICE
WORK ORDER
NO. 63606
BS 10-11-04

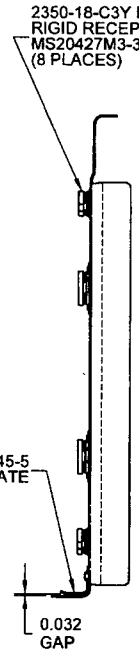

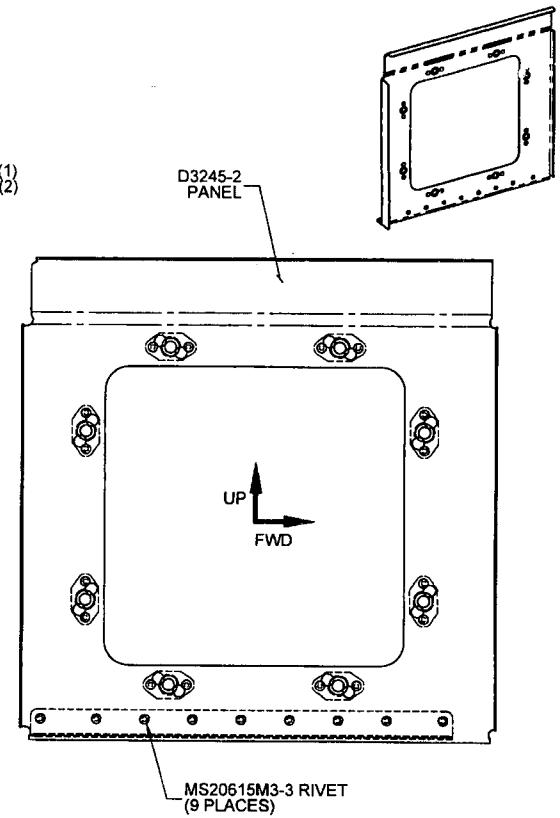

D3245-041 ACCESS PANEL ASSEMBLY

D3245-042 ACCESS PANEL ASSEMBLY

QTY -041	QTY -042	P/N	DESCRIPTION
X		D3245-041	ACCESS PANEL ASSEMBLY, LH
	X	D3245-042	ACCESS PANEL ASSEMBLY, RH
1		D3245-1	PANEL
	1	D3245-2	PANEL
1	1	D3245-5	ANGLE PLATE
8	8	2350-18-C3Y	DZUS RIGID RECEPTACLE
16	16	MS20427M3-3	RIVET
9	9	MS20615M3-3	RIVET

RELEASED
07-10-23

REV.	DESCRIPTION	BY	DATE
B	REMOVE Ø0.204 HOLES FROM D3245-1/-1F, REMOVE MS21060-L3K NUTPLATES & DURABLA BLACK GASKETS FROM D3245-041/-042: HOLES AND ITEMS ARE NOW PART OF INSTALLATION. ASSIGN P/Ns TO GASKETS & REFORMAT DRAWING	MB	07.10.02
A	NEW ISSUE	RF	04.01.27

DESIGN		**DART AEROSPACE LTD** HAWKESBURY, ONTARIO, CANADA
DRAWN		DRAWING NO. D3245 — REV. B — SHEET 1 OF 7
CHECKED		
MFG. APPR.		
APPROVED		TITLE: ACCESS PANEL ASSEMBLY — SCALE 1:2.5
DE APPR.		
DATE	07.10.02	

COPYRIGHT © 2004 BY DART AEROSPACE LTD
THIS DOCUMENT IS PRIVATE AND CONFIDENTIAL AND IS SUPPLIED ON THE EXPRESS CONDITION THAT IT IS NOT TO BE USED FOR ANY PURPOSE OR COPIED OR COMMUNICATED TO ANY OTHER PERSON WITHOUT WRITTEN PERMISSION FROM DART AEROSPACE LTD.

NOTES:
1) MATERIAL: N/A
2) FINISH: NONE
3) TOLERANCES: PER DART QSI 018 UNLESS OTHERWISE NOTED
4) UNITS: INCHES UNLESS OTHERWISE NOTED
5) ASSEMBLE IN ACCORDANCE WITH DART QSI 002
6) IDENTIFICATION: IDENTIFY WITH DART P/N "D3245-XX" AND B/N "BXXXXX" USING FINE POINT PERMANENT INK MARKER
7) WEIGHT: 0.83 lbs

Dart Aerospace Ltd

W/O:		WORK ORDER CHANGES					
DATE	STEP	PROCEDURE CHANGE	By	Date	Qty	Approval Chief Eng / Prod Mgr	Approval QC Inspector

Part No: _____ **PAR #:** _____ **Fault Category:** _____ **NCR:** Yes No **DQA:** _____ **Date:** _____

Resolution: _____ **Disposition:** _____ **QA: N/C Closed:** _____ **Date:** _____

NCR:		WORK ORDER NON-CONFORMANCE (NCR)						
DATE	STEP	Description of NC Section A	Corrective Action Section B			Verification Section C	Approval Chief Eng	Approval QC Inspector
			Initial Chief Eng	Action Description Chief Eng	Sign & Date			

NOTE: Date & initial all entries

H:\fFORMS\Quality Assurance\approved QA\NCRWO RevE

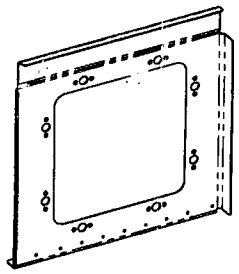

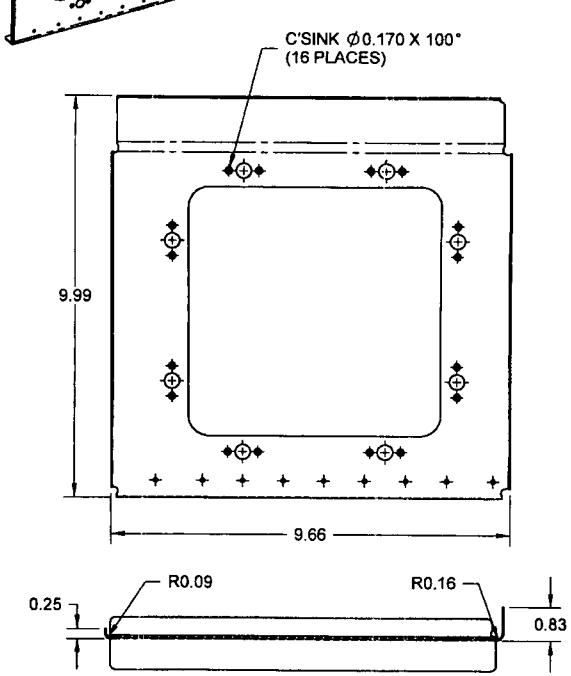

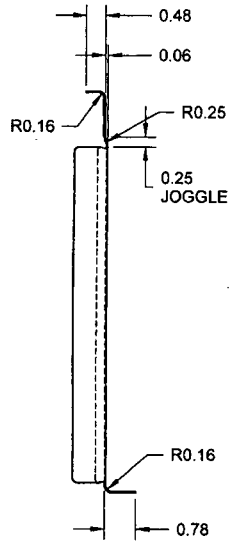

D3245-1 PANEL BEND DETAIL, LH

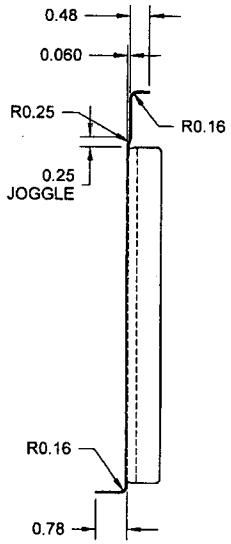

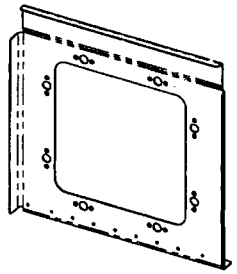

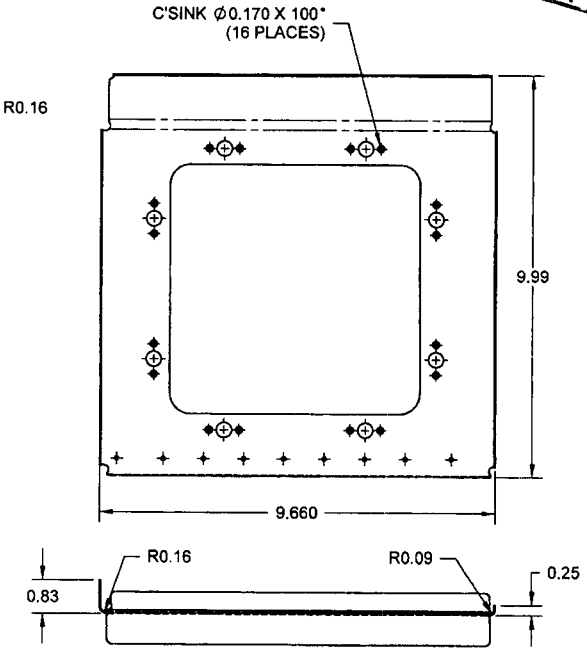

D3245-2 PANEL BEND DETAIL, RH

RELEASED
07-10-23

w/o 43606

NOTES:
1) MATERIAL: MAKE FROM D3245-1F
2) FINISH: NONE
3) TOLERANCES: PER DART QSI 018 UNLESS OTHERWISE NOTED
4) UNITS: INCHES UNLESS OTHERWISE NOTED
5) BREAK SHARP EDGES: N/A
6) IDENTIFICATION: N/A
7) WEIGHT: 0.70 lbs

DESIGN		**DART AEROSPACE LTD** HAWKESBURY, ONTARIO, CANADA
DRAWN		
CHECKED		DRAWING NO. D3245 — REV. B — SHEET 2 OF 7
MFG. APPR.		
APPROVED		TITLE: ACCESS PANEL ASSEMBLY — SCALE 1:3
DE APPR.		
DATE 07.10.02		

COPYRIGHT © 2004 BY DART AEROSPACE LTD
THIS DOCUMENT IS PRIVATE AND CONFIDENTIAL AND IS SUPPLIED ON THE EXPRESS CONDITION THAT IT IS NOT TO BE USED FOR ANY PURPOSE OR COPIED OR COMMUNICATED TO ANY OTHER PERSON WITHOUT WRITTEN PERMISSION FROM DART AEROSPACE LTD.

Dart Aerospace Ltd

W/O:		WORK ORDER CHANGES					
DATE	STEP	PROCEDURE CHANGE	By	Date	Qty	Approval Chief Eng / Prod Mgr	Approval QC Inspector

Part No: _____ **PAR #:** _____ **Fault Category:** _____ **NCR:** Yes No **DQA:** _____ **Date:** _____

Resolution: _____ **Disposition:** _____ **QA: N/C Closed:** _____ **Date:** _____

NCR:		WORK ORDER NON-CONFORMANCE (NCR)						
DATE	STEP	Description of NC Section A	Corrective Action Section B			Verification Section C	Approval Chief Eng	Approval QC Inspector
			Initial Chief Eng	Action Description Chief Eng	Sign & Date			

NOTE: Date & initial all entries

H:\fFORMS\Quality Assurance\approved QA\NCRWO RevE

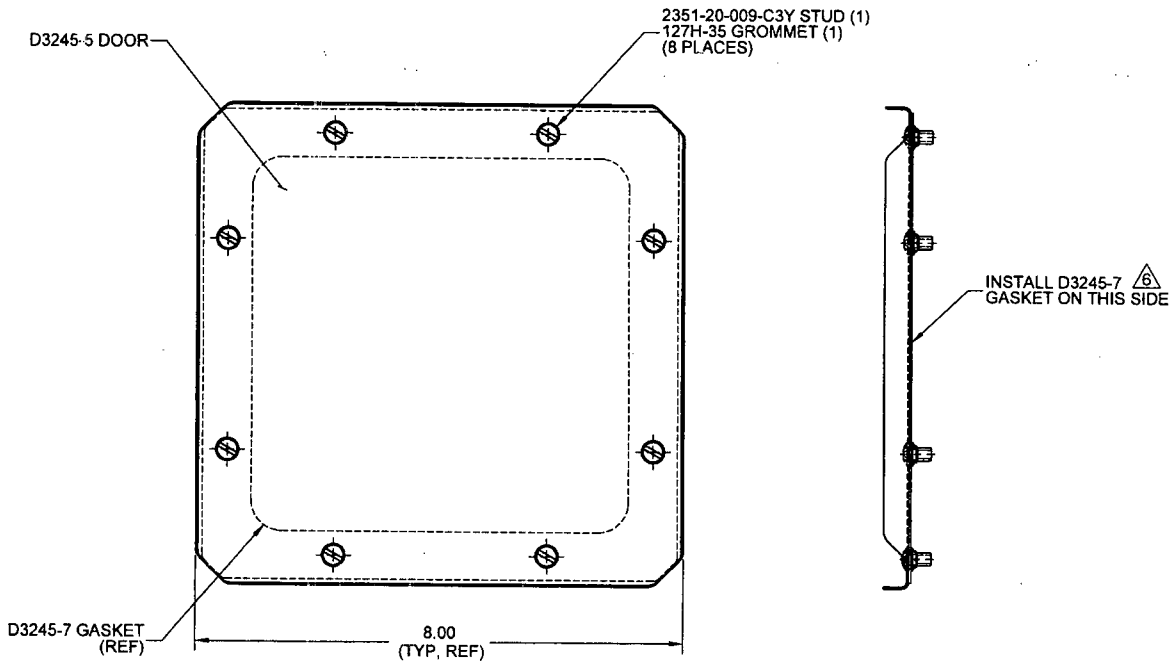

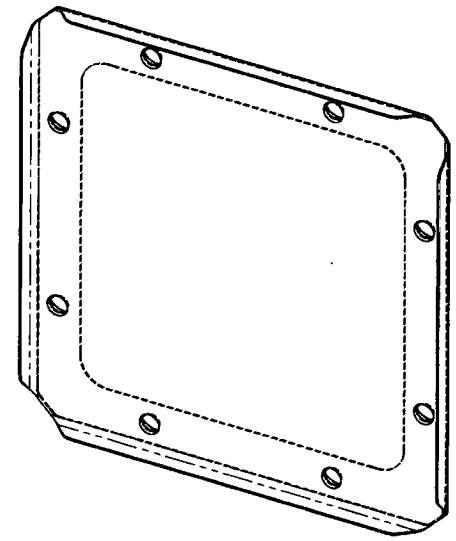

D3245-043 DOOR ASSEMBLY

QTY -043	P/N	DESCRIPTION
X	D3245-043	ACCESS PANEL ASSEMBLY
1	D3245-3	DOOR
1	D3245-7	GASKET
8	2351-20-009-C3Y	STUD
8	127H-35	GROMMET

w/o 43606

RELEASED

NOTES:
1) MATERIAL: N/A
2) FINISH: NONE
3) TOLERANCES: PER DART QSI 018 UNLESS OTHERWISE NOTED
4) UNITS: INCHES UNLESS OTHERWISE NOTED
5) BREAK SHARP EDGES: N/A
6) INSTALL D3245-7 GASKET USING 3M SCOTCH-GRIP 1300/1300L ADHESIVE IN ACCORDANCE WITH MANUFACTURER'S INSTRUCTIONS
7) ASSEMBLE IN ACCORDANCE WITH DART QSI 002
8) IDENTIFICATION: IDENTIFY WITH DART P/N "D3245-043" AND B/N "BXXXXX" USING FINE POINT PERMANENT INK MARKER
9) WEIGHT: 0.73 lbs

DESIGN		DART AEROSPACE LTD HAWKESBURY, ONTARIO, CANADA
DRAWN		
CHECKED		DRAWING NO. D3245 — REV. B — SHEET 3 OF 7
MFG. APPR.		
APPROVED		TITLE: ACCESS PANEL ASSEMBLY — SCALE 1:2
DE APPR.		
DATE	07.10.02	

COPYRIGHT © 2004 BY DART AEROSPACE LTD
THIS DOCUMENT IS PRIVATE AND CONFIDENTIAL AND IS SUPPLIED ON THE EXPRESS CONDITION THAT IT IS NOT TO BE USED FOR ANY PURPOSE OR COPIED OR COMMUNICATED TO ANY OTHER PERSON WITHOUT WRITTEN PERMISSION FROM DART AEROSPACE LTD.

Dart Aerospace Ltd

W/O:		WORK ORDER CHANGES					
DATE	STEP	PROCEDURE CHANGE	By	Date	Qty	Approval Chief Eng / Prod Mgr	Approval QC Inspector

Part No: _____ **PAR #:** _____ **Fault Category:** _____ **NCR:** Yes No **DQA:** _____ **Date:** _____

Resolution: _____ **Disposition:** _____ **QA: N/C Closed:** _____ **Date:** _____

NCR:		WORK ORDER NON-CONFORMANCE (NCR)						
DATE	STEP	Description of NC Section A	Corrective Action Section B			Verification Section C	Approval Chief Eng	Approval QC Inspector
			Initial Chief Eng	Action Description Chief Eng	Sign & Date			

NOTE: Date & initial all entries

H:\fFORMS\Quality Assurance\approved QA\NCRWO RevE

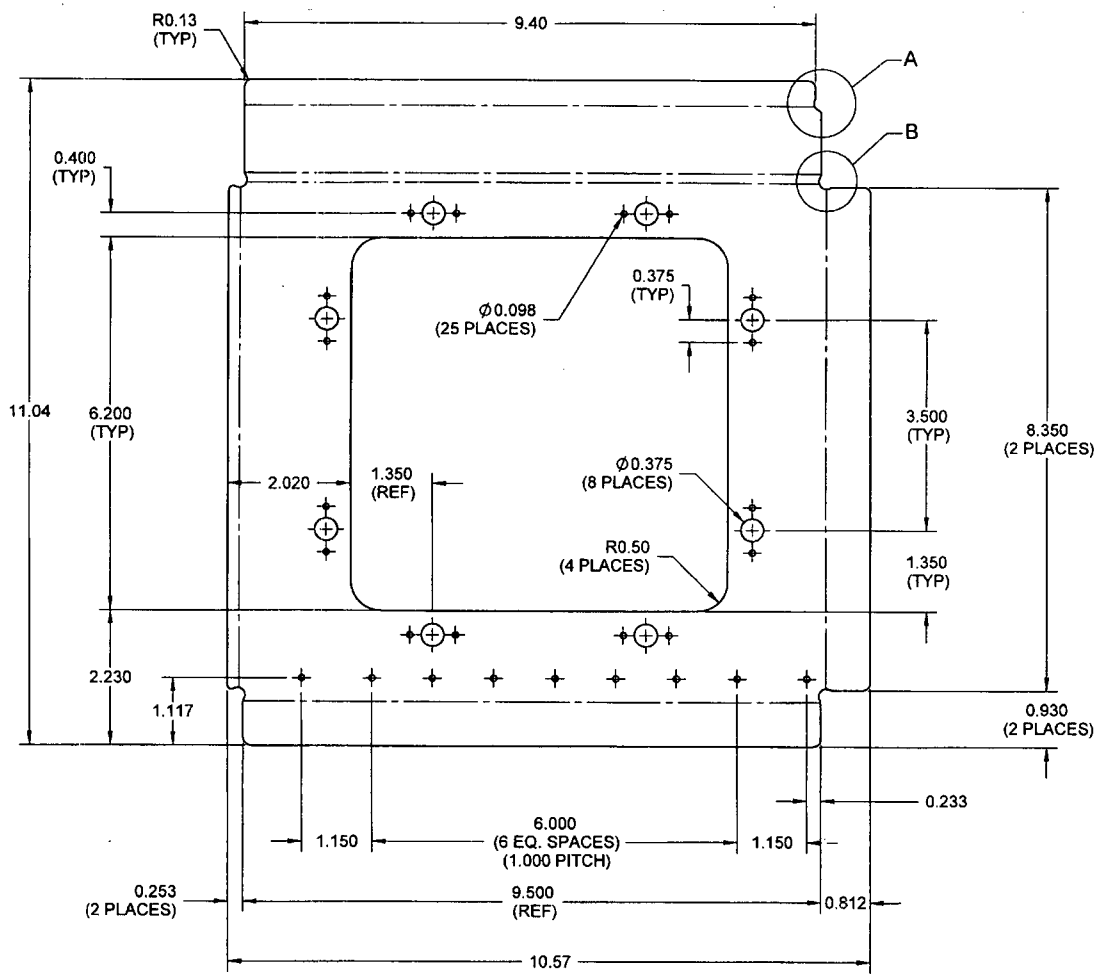

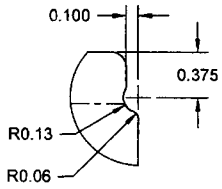

DETAIL A: RELIEF
SCALE 1 : 1

w/o 03606

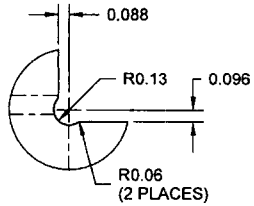

DETAIL B: RELIEF
(TYP, 4 PLACES)
SCALE 1 : 1

NOTES:
1) MATERIAL: AISI 304/316 STAINLESS STEEL SHEET
(0.032 THICK, REF)
PER MIL-S-5019 (ANNEALED) 2B FINISH
(REF. DART SPEC. M304S22GA)
2) FINISH: NONE
3) TOLERANCES: PER DART QSI 018 UNLESS OTHERWISE NOTED
4) UNITS: INCHES UNLESS OTHERWISE NOTED
5) BREAK SHARP EDGES: 0.005 TO 0.010 MAX
6) IDENTIFICATION: N/A
7) WEIGHT: 0.70 lbs

RELEASED
04.10.23

D3245-1F PANEL FLAT PATTERN

DESIGN		DART AEROSPACE LTD	
DRAWN		HAWKESBURY, ONTARIO, CANADA	
CHECKED	PH	DRAWING NO. D3245	REV. B
MFG. APPR.			SHEET 4 OF 7
APPROVED		TITLE ACCESS PANEL ASSEMBLY	SCALE 1:2
DE APPR.			
DATE 07.10.02			

COPYRIGHT © 2004 BY DART AEROSPACE LTD
THIS DOCUMENT IS PRIVATE AND CONFIDENTIAL AND IS SUPPLIED ON THE EXPRESS CONDITION THAT IT IS NOT TO BE USED FOR ANY PURPOSE OR COPIED OR COMMUNICATED TO ANY OTHER PERSON WITHOUT WRITTEN PERMISSION FROM DART AEROSPACE LTD.

Dart Aerospace Ltd

W/O:		WORK ORDER CHANGES					
DATE	STEP	PROCEDURE CHANGE	By	Date	Qty	Approval Chief Eng / Prod Mgr	Approval QC Inspector

Part No: _____ **PAR #:** _____ **Fault Category:** _____ **NCR:** Yes No **DQA:** _____ **Date:** _____

Resolution: _____ **Disposition:** _____ **QA: N/C Closed:** _____ **Date:** _____

NCR:		WORK ORDER NON-CONFORMANCE (NCR)						
DATE	STEP	Description of NC Section A	Corrective Action Section B			Verification Section C	Approval Chief Eng	Approval QC Inspector
			Initial Chief Eng	Action Description Chief Eng	Sign & Date			

NOTE: Date & initial all entries

H:\fFORMS\Quality Assurance\approved QA\NCRWO RevE

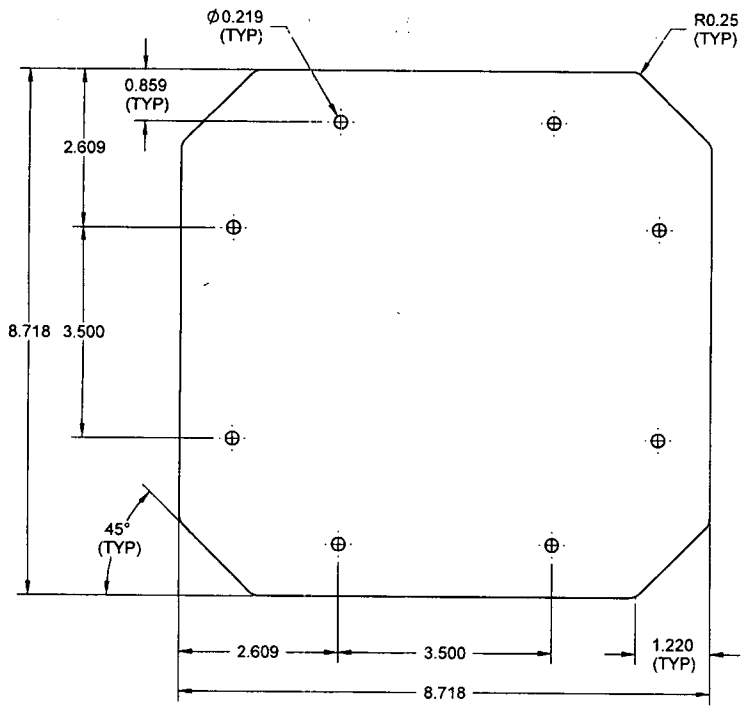

D3245-3F DOOR FLAT PATTERN

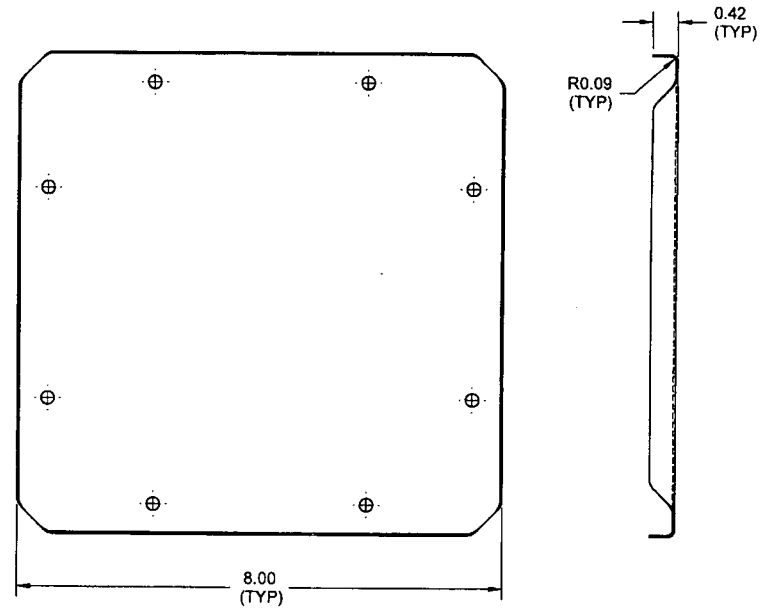

D3245-3 DOOR BENDING DETAIL

w/o 43464

RELEASED
07.10.03

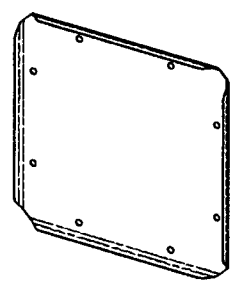

NOTES:
1) MATERIAL: AISI 304/316 STAINLESS STEEL SHEET (0.032 THICK, REF)
PER MIL-S-5019 (ANNEALED) 2B FINISH
(REF. DART SPEC. M304S22GA)
2) FINISH: NONE
3) TOLERANCES: PER DART QSI 018 UNLESS OTHERWISE NOTED
4) UNITS: INCHES UNLESS OTHERWISE NOTED
5) BREAK SHARP EDGES: 0.005 TO 0.010 MAX
6) IDENTIFICATION: N/A
7) WEIGHT: 0.67 lbs

DESIGN	TF	**DART AEROSPACE LTD** HAWKESBURY, ONTARIO, CANADA
DRAWN		
CHECKED	PH	DRAWING NO. D3245 REV. B SHEET 5 OF 7
MFG. APPR.		
APPROVED		TITLE ACCESS PANEL ASSEMBLY SCALE 1:2
DE APPR.		
DATE	07.10.02	

COPYRIGHT © 2004 BY DART AEROSPACE LTD
THIS DOCUMENT IS PRIVATE AND CONFIDENTIAL AND IS SUPPLIED ON THE EXPRESS CONDITION THAT IT IS NOT TO BE USED FOR ANY PURPOSE OR COPIED OR COMMUNICATED TO ANY OTHER PERSON WITHOUT WRITTEN PERMISSION FROM DART AEROSPACE LTD.

Dart Aerospace Ltd

W/O:		WORK ORDER CHANGES					
DATE	STEP	PROCEDURE CHANGE	By	Date	Qty	Approval Chief Eng / Prod Mgr	Approval QC Inspector

Part No: _____ **PAR #:** _____ **Fault Category:** _____ **NCR:** Yes No **DQA:** _____ **Date:** _____

Resolution: _____ **Disposition:** _____ **QA: N/C Closed:** _____ **Date:** _____

NCR:		WORK ORDER NON-CONFORMANCE (NCR)						
DATE	STEP	Description of NC Section A	Corrective Action Section B			Verification Section C	Approval Chief Eng	Approval QC Inspector
			Initial Chief Eng	Action Description Chief Eng	Sign & Date			

NOTE: Date & initial all entries

H:\fFORMS\Quality Assurance\approved QA\NCRWO RevE

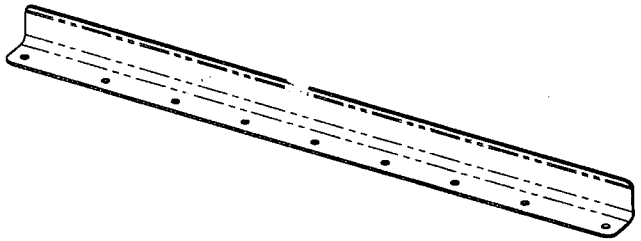

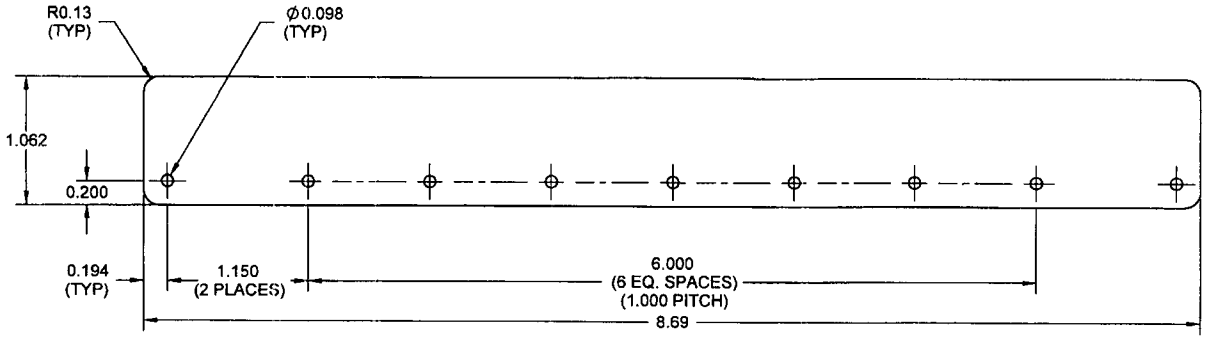

D3245-5F FLAT PATTERN

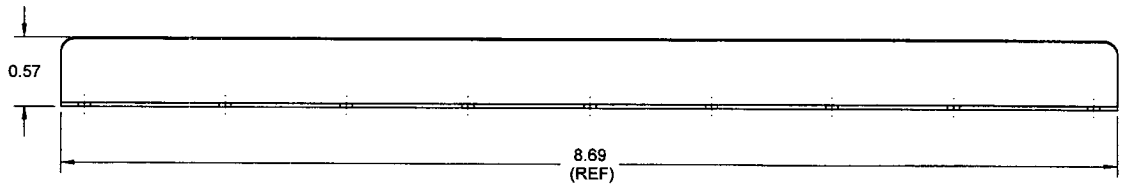

D3245-5 BEND DETAIL
(MAKE FROM D3245-5F)

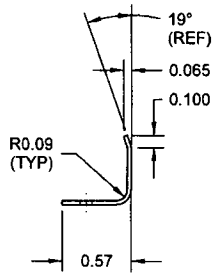

RELEASED 07.10.23

w/o 63604

NOTES:
1) MATERIAL: AISI 304/316 STAINLESS STEEL SHEET (0.032 THICK, REF)
PER MIL-S-5019 (ANNEALED) 2B FINISH
(REF. DART SPEC. M304S22GA)
2) FINISH: NONE
3) TOLERANCES: PER DART QSI 018 UNLESS OTHERWISE NOTED
4) UNITS: INCHES UNLESS OTHERWISE NOTED
5) BREAK SHARP EDGES: 0.005 TO 0.010 MAX
6) IDENTIFICATION: N/A
7) WEIGHT: 0.08 lbs

DESIGN		**DART AEROSPACE LTD** HAWKESBURY, ONTARIO, CANADA
DRAWN		
CHECKED	PH	DRAWING NO. D3245 — REV. B — SHEET 6 OF 7
MFG. APPR.		
APPROVED		TITLE: ACCESS PANEL ASSEMBLY — SCALE 1:1
DE APPR.		
DATE 07.10.02		

COPYRIGHT © 2004 BY DART AEROSPACE LTD
THIS DOCUMENT IS PRIVATE AND CONFIDENTIAL AND IS SUPPLIED ON THE EXPRESS CONDITION THAT IT IS NOT TO BE USED FOR ANY PURPOSE OR COPIED OR COMMUNICATED TO ANY OTHER PERSON WITHOUT WRITTEN PERMISSION FROM DART AEROSPACE LTD.

Dart Aerospace Ltd

W/O:		WORK ORDER CHANGES					
DATE	STEP	PROCEDURE CHANGE	By	Date	Qty	Approval Chief Eng / Prod Mgr	Approval QC Inspector

Part No: _____ **PAR #:** _____ **Fault Category:** _____ **NCR:** Yes No **DQA:** _____ **Date:** _____

Resolution: _____ **Disposition:** _____ **QA: N/C Closed:** _____ **Date:** _____

NCR:		WORK ORDER NON-CONFORMANCE (NCR)						
DATE	STEP	Description of NC Section A	Corrective Action Section B			Verification Section C	Approval Chief Eng	Approval QC Inspector
			Initial Chief Eng	Action Description Chief Eng	Sign & Date			

NOTE: Date & initial all entries

H:\fFORMS\Quality Assurance\approved QA\NCRWO RevE

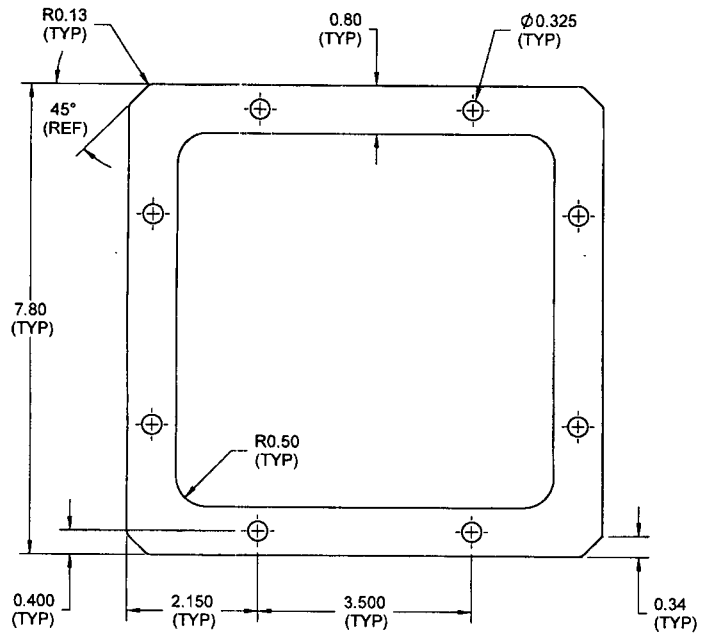

D3245-7 GASKET

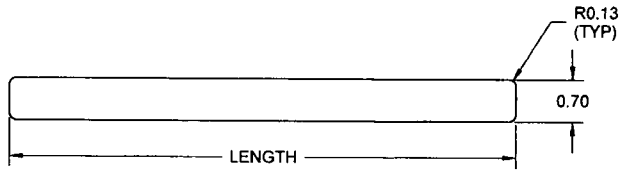

D3245-X GASKET

P/N	LENGTH
D3245-9	8.35
D3245-11	9.01
D3245-13	9.50

w/o 43404

RELEASED
07.10.03

NOTES:
1) MATERIAL: DURABLA BLACK GASKET, 0.035 THICK
(PER MIL-A-7021C OR MIL-A-17472B OR MIL-G-12803A)
2) FINISH: NONE
3) TOLERANCES: PER DART QSI 018 UNLESS OTHERWISE NOTED
4) UNITS: INCHES UNLESS OTHERWISE NOTED
5) BREAK SHARP EDGES: N/A
6) IDENTIFICATION: N/A
7) WEIGHT: N/A

DESIGN		**DART AEROSPACE LTD** HAWKESBURY, ONTARIO, CANADA
DRAWN		
CHECKED	PH	DRAWING NO. D3245 — REV. B — SHEET 7 OF 7
MFG. APPR.		
APPROVED		TITLE: ACCESS PANEL ASSEMBLY — SCALE 1:2
DE APPR.		
DATE	07.10.02	

COPYRIGHT © 2004 BY DART AEROSPACE LTD
THIS DOCUMENT IS PRIVATE AND CONFIDENTIAL AND IS SUPPLIED ON THE EXPRESS CONDITION THAT IT IS NOT TO BE USED FOR ANY PURPOSE OR COPIED OR COMMUNICATED TO ANY OTHER PERSON WITHOUT WRITTEN PERMISSION FROM DART AEROSPACE LTD.

Dart Aerospace Ltd

W/O:		WORK ORDER CHANGES					
DATE	STEP	PROCEDURE CHANGE	By	Date	Qty	Approval Chief Eng / Prod Mgr	Approval QC Inspector

Part No: _____ **PAR #:** _____ **Fault Category:** _____ **NCR:** Yes No **DQA:** _____ **Date:** _____

Resolution: _____ **Disposition:** _____ **QA: N/C Closed:** _____ **Date:** _____

NCR:		WORK ORDER NON-CONFORMANCE (NCR)						
DATE	STEP	Description of NC Section A	Corrective Action Section B			Verification Section C	Approval Chief Eng	Approval QC Inspector
			Initial Chief Eng	Action Description Chief Eng	Sign & Date			

NOTE: Date & initial all entries

H:\fFORMS\Quality Assurance\approved QA\NCRWO RevE